SYSTEM CARE

For more assistance with technical questions please call our technical support staff at (714) 259-9959. You can also contact us by email at **info@brucklightingsystems.com**.

TROUBLESHOOTING

Q. My system shuts off after extended use and the transformer is constantly tripping; is it defective?

A. Improper installation is the most common reason for system malfunction.
Check the following areas carefully:

- Check the wiring of the power cables to your transformer (see transformer installation instructions).
- Make sure **ALL** connections are clean and tight to avoid electrical arcing. This includes connectors, lamp sockets, power feeds, power cable connections, etc.
- The total load (in Watts) for the system must not exceed the transformer's load capacity. Make sure that the isolating connectors are correctly placed to prevent overloading (Generally, this is 5 fixtures at 50W each for a 300W transformer).

CLEANING

Turn off power to the system before performing any maintenance on the system. The track, fixtures, and components can be wiped off with a damp cloth to clean from dust.

LAMP REPLACEMENT

The system should be turned off to change any lamps. Allow several minutes for the fixtures to cool before attempting to re-lamp. Fixtures will be labeled with a maximum wattage and lamp type. Lamp wattage should never exceed 50 watts. The two most common Bruck lamps are the Gu5.3 base MR16 and a Gy6.35 base Bi-pin.
Bruck recommends replacing lamps with the same exact lamp type supplied with the system to avoid problems.

BRUCK LIGHTING SYSTEMS LIMITED WARRANTY

Merchandise is manufactured according to our high standards and is warranted to be free from defects in material and workmanship for one (1) year from date of delivery. During this period we will, at our option, repair or replace, free of charge such merchandise that proves to be defective. This warranty does not apply to products damaged due to accident, tampering, misuse, abuse or abnormal usage and in no event shall Bruck's obligation under warranty extend beyond the initial cost of products. This warranty does not cover cost, if any, of reinstallation of products serviced under this warranty.

BRUCK.

BRUCK LIGHTING SYSTEMS INC.
15774 Gateway Circle, Tustin, CA 92780
PH (714) 259-9959 FAX (714) 259-9969
WWW.BRUCKLIGHTING.COM

BRUCK.

V/A Operation & Maintenance Manual

IMPORTANT SAFETY INSTRUCTIONS

1. **SAVE THESE INSTRUCTIONS AND REFER TO THEM WHEN ADDITIONS TO OR CHANGES IN THE TRACK CONFIGURATION ARE MADE.**
2. **THIS PRODUCT MUST BE INSTALLED BY A PERSON FAMILIAR WITH THE CONSTRUCTION AND OPERATION OF THE PRODUCT AND THE HAZARDS INVOLVED, IN ACCORDANCE WITH LOCAL AND NATIONAL CODE.**
3. **Do not** install this track in damp or wet locations.
4. **Do not** install any non-insulated part of the track less than 7 feet above the floor.
5. **CAUTION - Do not** install any fixture assembly closer than 6 inches from any curtain, or similar combustible material.
6. **Turn off power** prior to any work on the systems.
7. **Do not** attempt to energize anything other than lighting track fixtures specified for use with the V/A system.
8. **To reduce the risk of fire and electric shock, do not attempt to connect power tools, extension cords, appliances, and the like to the track.**
9. This track system **MUST BE HARD WIRED**. For all the wire connections, use **Listed Wire Nuts**.
10. No circuit is to exceed 300W or transformer capacity.
11. Secondary **connections must be clean and tight** to avoid arcing and overheating!
12. Warranty is void in case of unauthorized modifications and/ or improper use.

READ ALL OF THESE INSTALLATION INSTRUCTIONS BEFORE INSTALLING THE SYSTEM

BRUCK LIGHTING SYSTEMS INC. 15774 Gateway Circle, Tustin, CA 92780 PH (714) 259-9959 FAX (714) 259-9969
WWW.BRUCKLIGHTING.COM

V/A TRACK

V/A track should be cut to desired lengths prior to installation. Make sure the cut ends are deburred to facilitate track connecting.

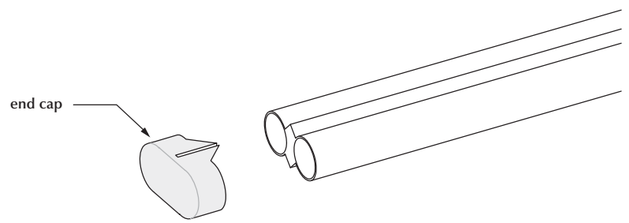

TRACK CONNECTORS

Internal straight connectors plug directly into the V/A track. An ISO-straight connector must be used when powering beyond 300W. Do Not Connect track with parts other than the internal or external V/A track connectors. Angled connectors plug directly into the V/A track. External angled connectors must have tight, clean connections.

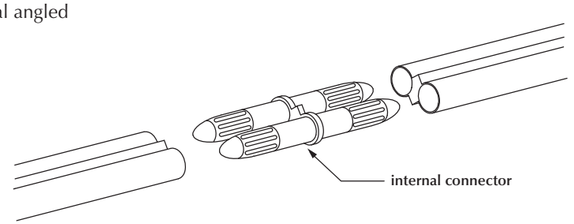

SUPPORTS

Supports should be mounted approximately every 3 ft. Mark support locations on the ceiling or wall prior to installation to ensure proper spacing. Supports must be attached to a firm base (solid backing or wood beam) for optimal system strength.
Cable suspension should be at equal lengths to create a level track run. When mounting the cable suspension to a sloped ceiling, mount the suspension first and compare the drop. Cable lengths are field adjustable.

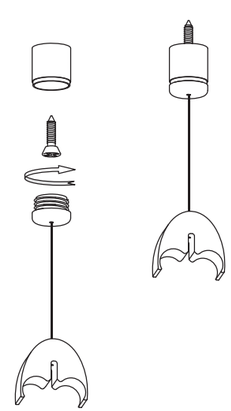

POWER SUPPLY

All Connections Must Be Tight and Clean to prevent arcing and overheating; **DAMAGE TO THE SYSTEM** will result if ignored! Transformer should be mounted no more than 15 ft. from the V/A power feeds for optimal performance*.

When turning on the system for the first time, turn off the system after 15 minutes and check ALL track and power connections for any heat. A proper connection will **NOT** feel significantly higher than body temperature. If connection feels warmer, re-tighten and re-check until remedied. **CAUTION - lamps will be hot!**

*TQ transformers may increase the optimal distance at which transformers can be placed; please see the documentation included with your transformer for details.

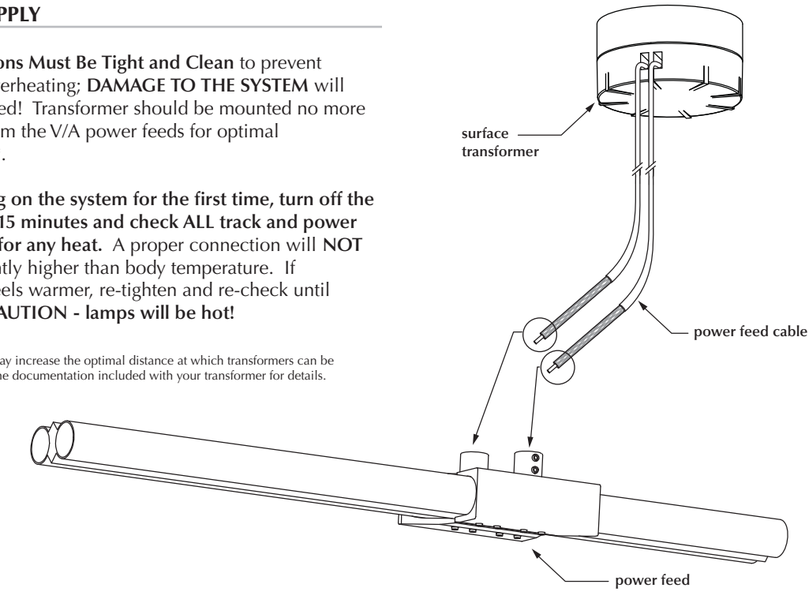

V/A FIXTURES & ADAPTORS

The V/A adaptor clamps directly onto the track. A retaining clip is included to prevent accidental dislocation of the adaptor. Make sure the lamp is secure in the socket and the fixture is securely attached to the adaptor. The twisting lock on the Uni-plug must be tightened to prevent a loose connection.
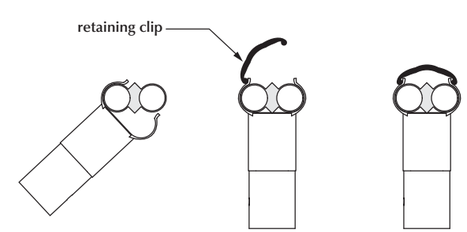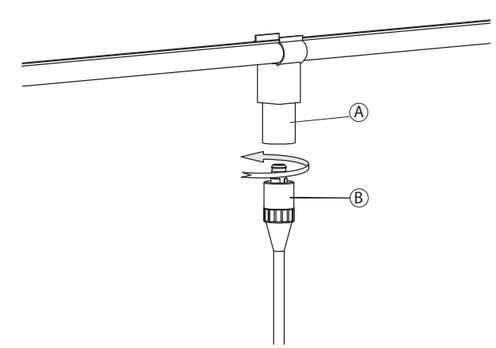
IMPORTANT WARNING! - When turning the retaining collar (B), adjusting the direction of the fixture, or moving the fixture in any way **DO NOT** loosen the adaptor receptacle (A). Tighten the receptacle (A) by turning in a clockwise direction. All connections after installing or adjusting the fixture must be clean and tight to avoid arcing and overheating; failure to do so may result in subsequent lamp, fixture, or system failure!