BRUCK LIGHTING SYSTEMS
15774 Gateway Circle Tustin, CA. 92780
www.brucklighting.com

For more assistance with technical questions please call our technical support staff at (714) 259-9959. You can also contact us by email at info@brucklightingsystems.com.

BRUCK.

INSTALLATION INSTRUCTIONS

USA

TECHNICAL

FLUSH MOUNTED PLUG-IN CANOPY ISO

Art. No. 156 030mc matte chrome

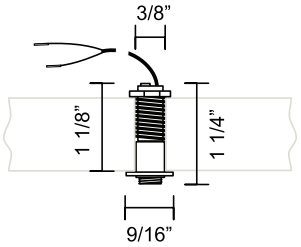

IMPORTANT SAFETY INSTRUCTIONS

1. Read all instructions!
2. Turn off power prior to any work on the systems.
3. Only a qualified electrician should install this hard wired transformer.
4. For all the wire connections, use UL listed Wire Nuts.
5. Only BRUCK fixtures and components may be used with the system.
6. Total wattage of the system must never exceed the wattage supplied by the low voltage transformer. Please check that the total lamp wattage does not exceed 300W per circuit.
7. Secondary connections must be clean and tight to avoid arcing and overheating!
8. Warranty is void in case of unauthorized modifications and/ or improper use.

READ ALL OF THESE INSTALLATION INSTRUCTIONS BEFORE INSTALLING THE SYSTEM

This Package Contains:
Flush Mounted Plug-in Canopy ISO - qty. (1)

- Drill a 1/2" hole into the desired mounting surface.

- Determine if spacing washers are needed (thin surfaces need more washers than thick surfaces).

- Tighten the ceiling plug into place by turning the nut.
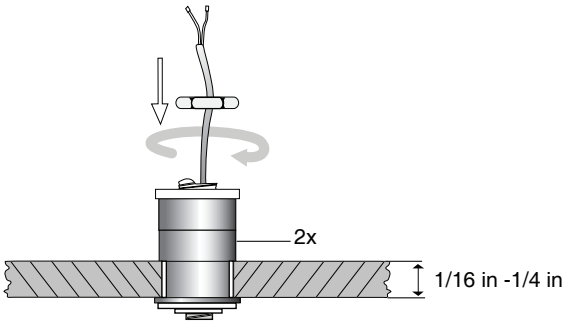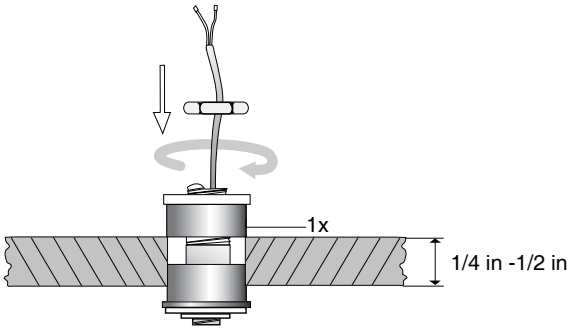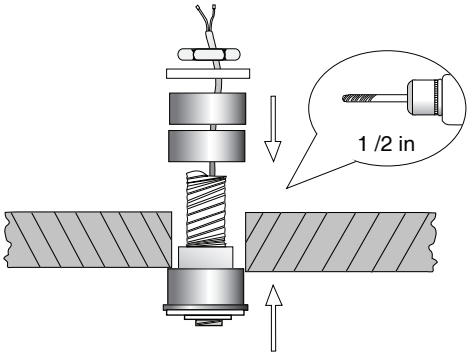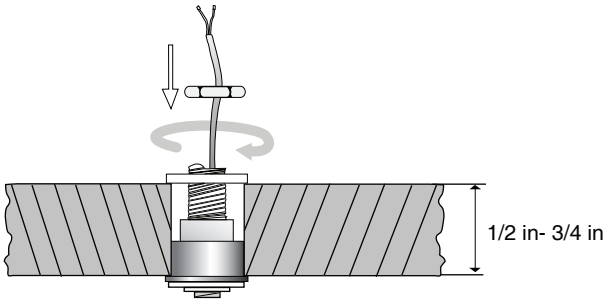
- Attach the two wires to the power supply cables coming from the low voltage transformer. Use wire nuts.