BRUCK LIGHTING SYSTEMS
15774 Gateway Circle Tustin, CA. 92780
www.brucklighting.com

For more assistance with technical questions please call our technical support staff at (714) 259-9959. You can also contact us by email at info@brucklightingsystems.com.

BRUCK.

INSTALLATION INSTRUCTIONS

USA

TECHNICAL

4” SURFACE MOUNT CANOPY

ART. NO.	240 000bz	bronze
	240 000ch	chrome
	240 000ch/mc	chrome, matte chrome
	240 000mc	matte chrome
	240 000mc/ch	matte chrome, chrome
	240 000wh	white

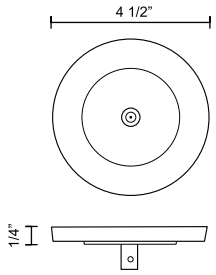

IMPORTANT SAFETY INSTRUCTIONS

1. Read all instructions!
2. Turn off power prior to any work on the canopy.
3. THIS PRODUCT MUST BE INSTALLED BY A PERSON FAMILIAR WITH THE CONSTRUCTION AND OPERATION OF THE PRODUCT AND THE HAZARDS INVOLVED, IN ACCORDANCE WITH THE APPLICABLE INSTALLATION CODE.
4. Only BRUCK Uni-Light fixtures may be used with the surface canopy.
5. Please check that the total lamp wattage does not exceed 75W.
6. Secondary connections must be clean and tight to avoid arcing and overheating!
7. Warranty is void in case of unauthorized modifications and/ or improper use.

READ ALL OF THESE INSTALLATION INSTRUCTIONS BEFORE INSTALLING THE SYSTEM

This Package Contains:
Surface mount canopy - qty.(1)

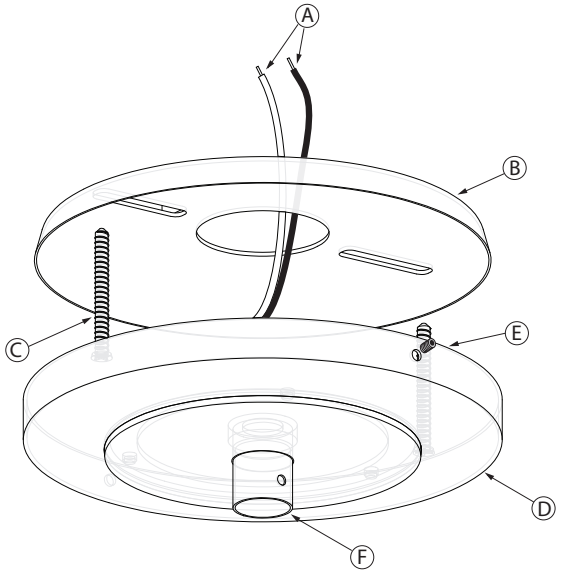

The Surface Mount Canopy can be mounted directly to any wall or ceiling with access to the power cables. Connect the wires (A) from the canopy to the power supply cables from the transformer.
Insert the screws (C) into the mounting plate (B) and tighten.

Place the canopy cover (D) over the mounting plate (B) and secure it with the allen screw (E) located on the side of the base.

A Uni-Light fixture can be attached to the socket (F). Insert the uni-plug into the socket and twist the collar to complete the installation.