BRUCK LIGHTING SYSTEMS
15774 Gateway Circle Tustin, CA. 92780
www.brucklighting.com

For more assistance with technical questions please call our technical support staff at (714) 259-9959. You can also contact us by email at info@brucklightingsystems.com.

BRUCK.

INSTALLATION INSTRUCTIONS

USA

TECHNICAL

SLOPED CEILING FEED COVER

Art. No.	240 120bz	bronze
	240 120ch	chrome
	240 120mc	matte chrome

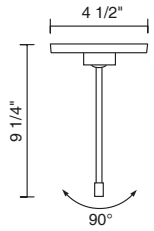

IMPORTANT SAFETY INSTRUCTIONS

1. Read all instructions!
2. Turn off power prior to any work on the canopy.
3. THIS PRODUCT MUST BE INSTALLED BY A PERSON FAMILIAR WITH THE CONSTRUCTION AND OPERATION OF THE PRODUCT AND THE HAZARDS INVOLVED, IN ACCORDANCE WITH THE LOCAL NEC CODE.
4. This sloped ceiling feed cover MUST BE HARD WIRED, 12v. For all the wire connections, use Listed Wire Nuts.
5. Only BRUCK components may be used with the sloped ceiling feed cover.
6. The Sloped Ceiling Feed Cover accomodates (2) separate 300W power feed cables.
7. Secondary connections must be clean and tight to avoid arcing and overheating!
8. Warranty is void in case of unauthorized modifications and/ or improper use.

READ ALL OF THESE INSTALLATION INSTRUCTIONS BEFORE INSTALLING THE SYSTEM

This Package Contains:

Sloped Ceiling Feed Cover - qty.(1)

The Sloped Ceiling Feed Cover can be mounted directly to any ceiling with access to the power cables. Begin by connecting the power supply cables (A) from the canopy to the power cables in the wall. Insert the screws (B) into the mounting plate (C) in alignment with the J-box and tighten until firmly connected.

Place the canopy cover (D) over the mounting plate (C) and secure it with the allen screws (E) located on the side of the base.

Adjustments to the angle of the stem rod can be made by loosening the allen screws (F) on the cover.
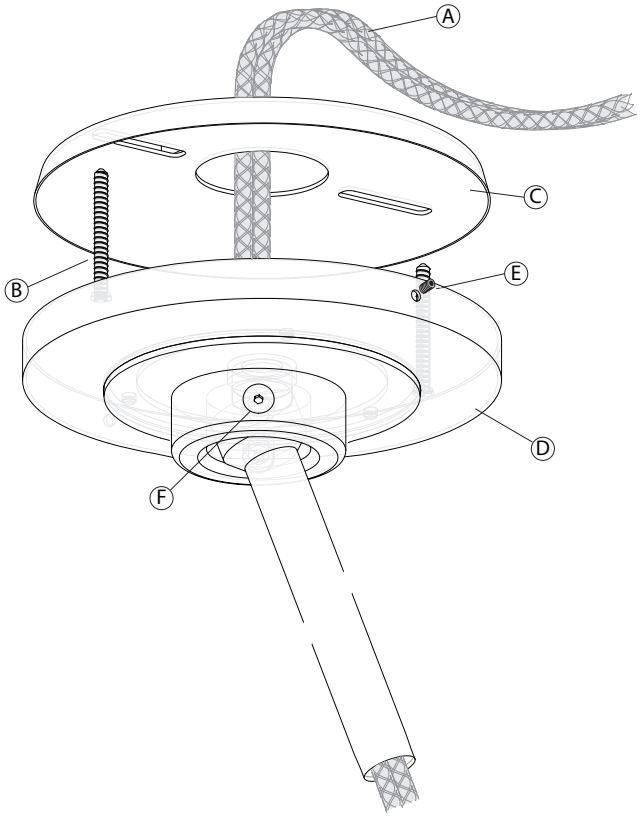
The power cables at the end of the stem rod should be attached to a Bruck powerfeed. The Sloped Ceiling Feed Cover accommodates two separate 300W power feed cables.